Hengst FILTER
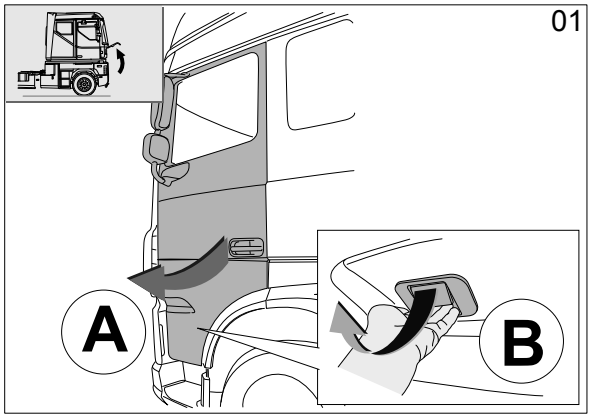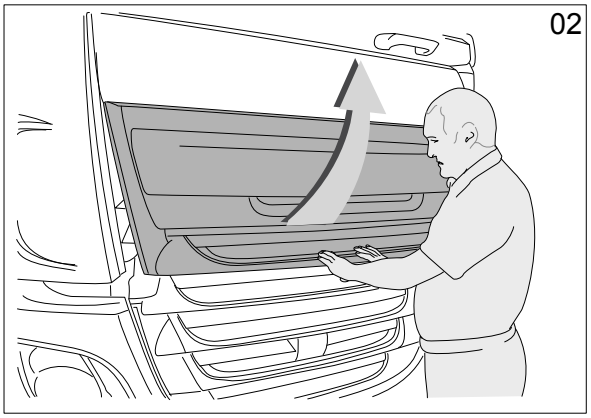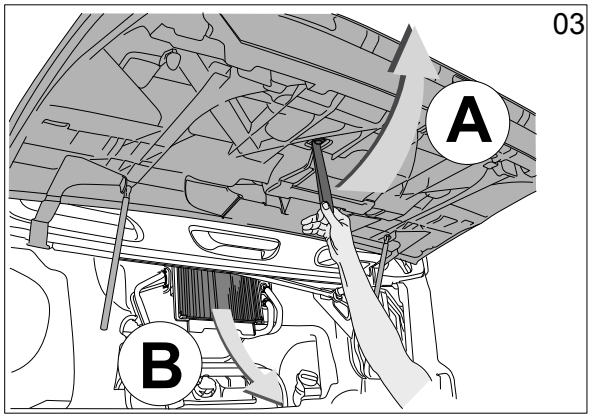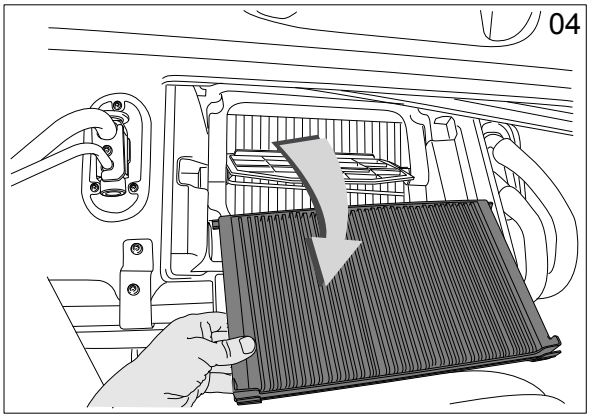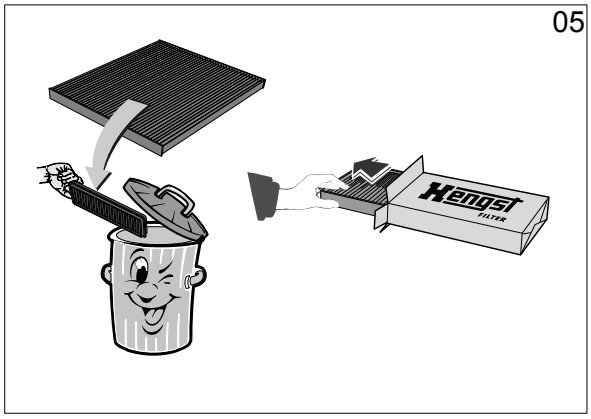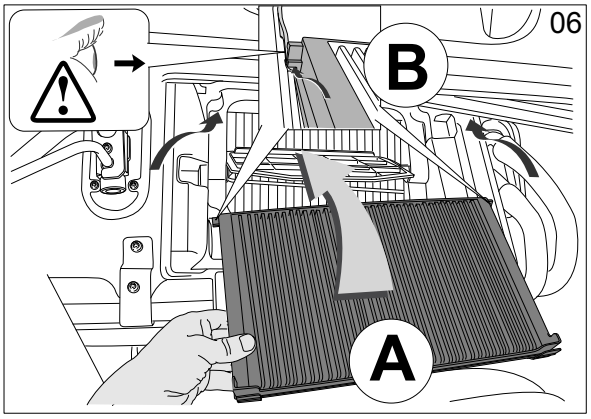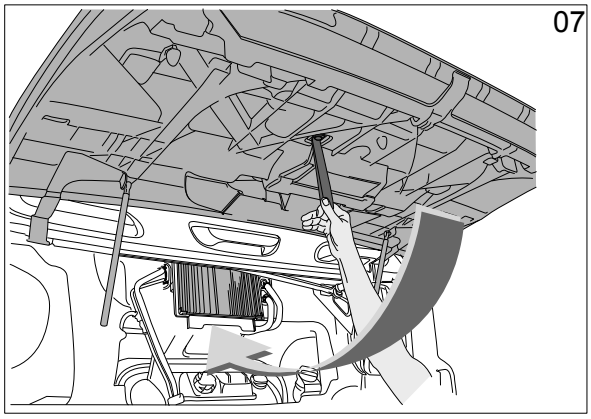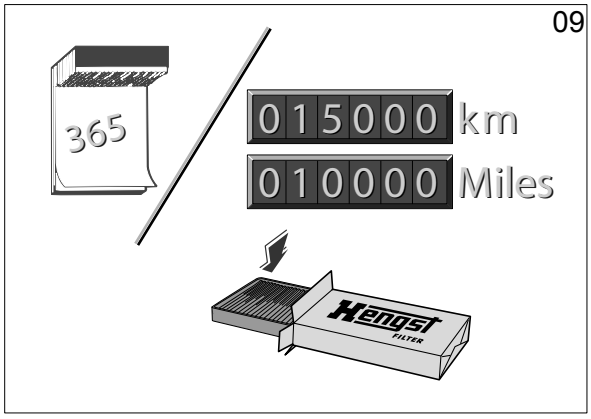
E4947LC