Hengst FILTER
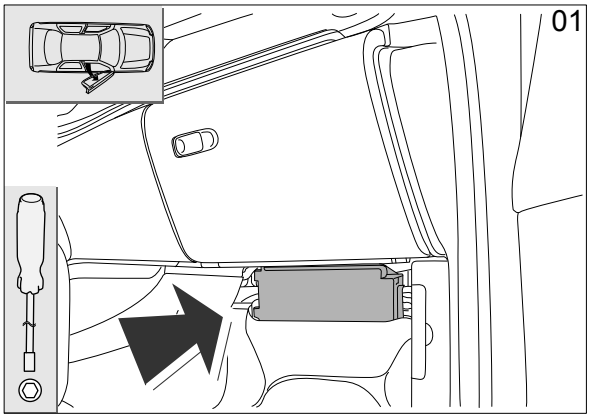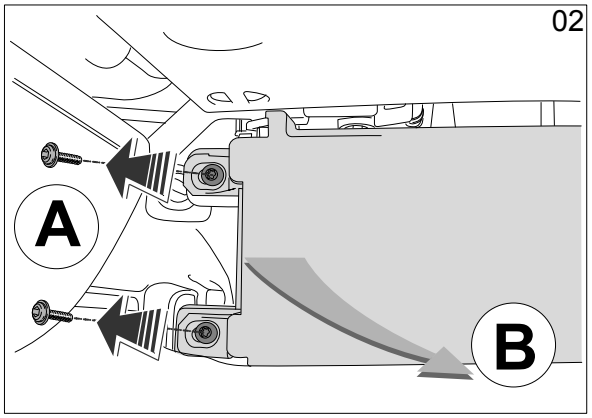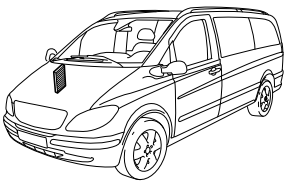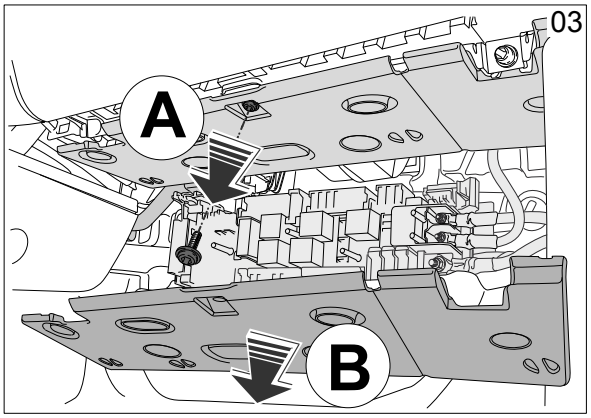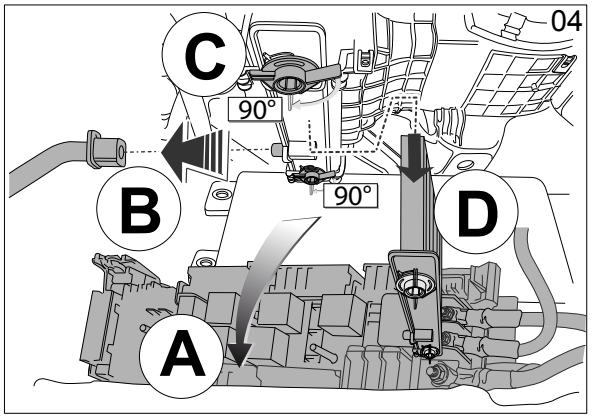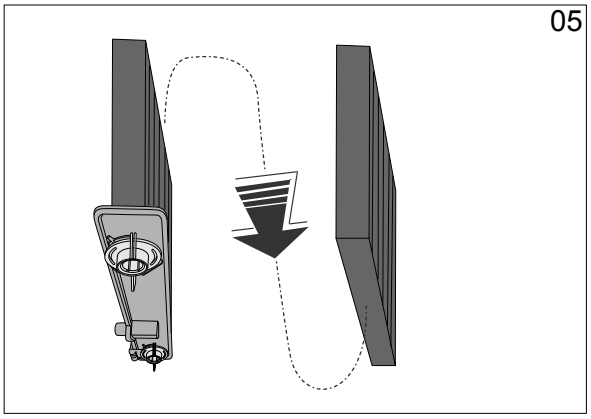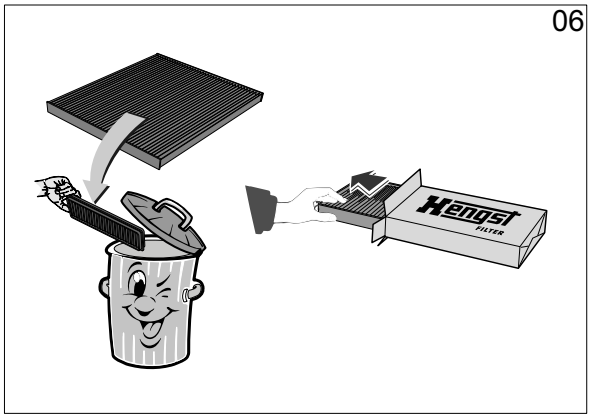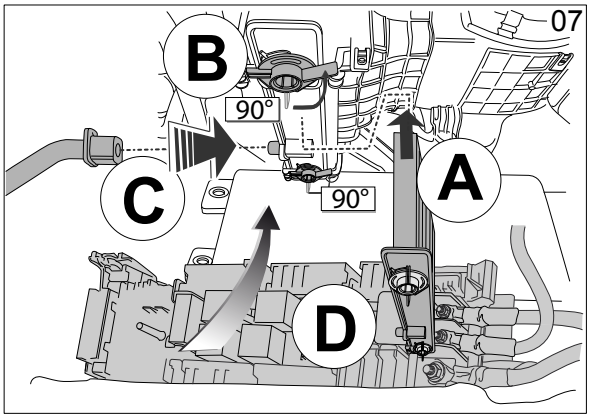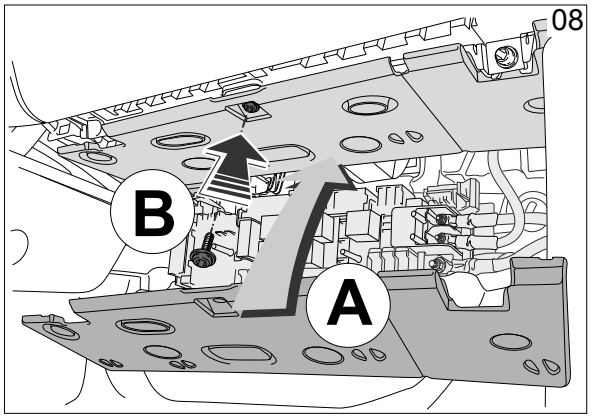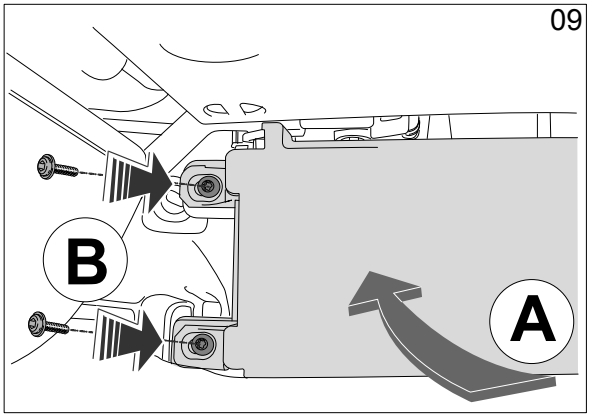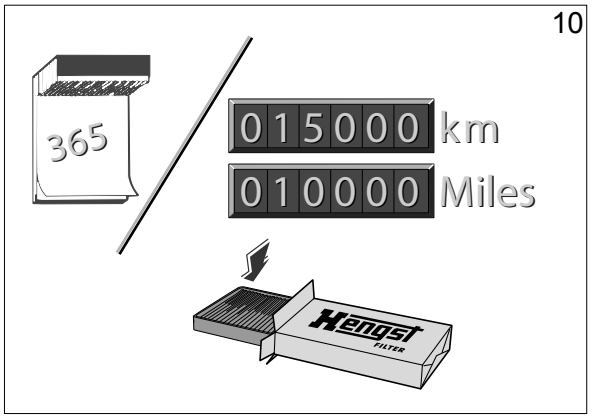
# E4927LI/LC