Hengst FILTER

E4911LI-2

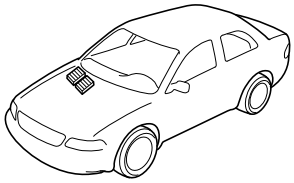

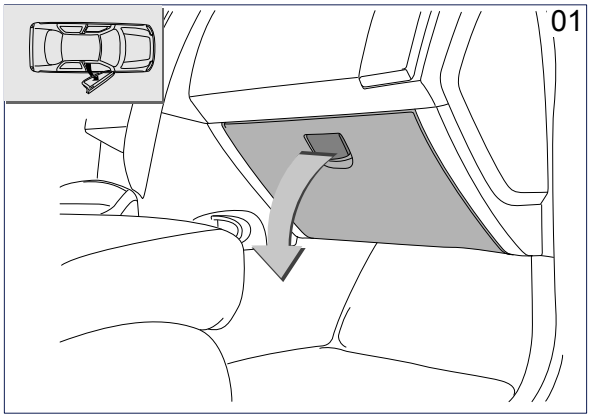

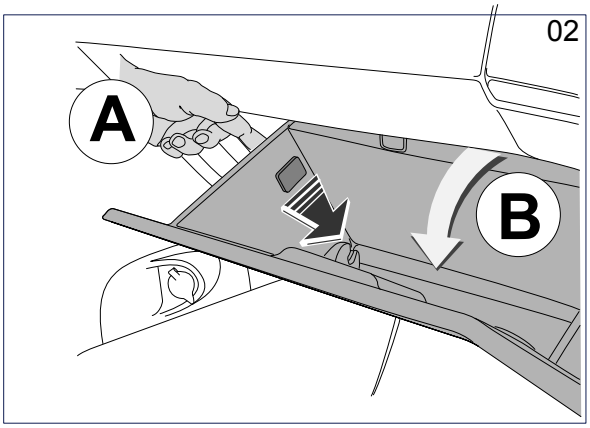

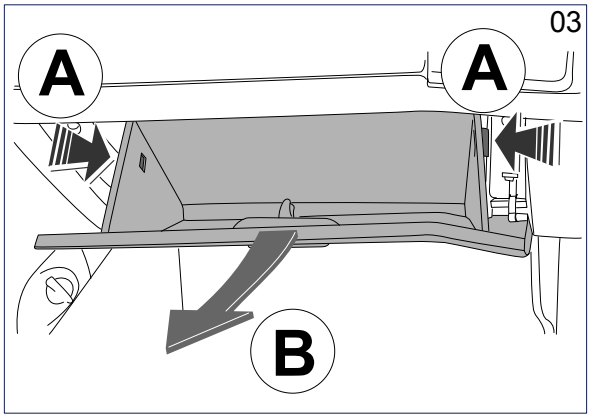

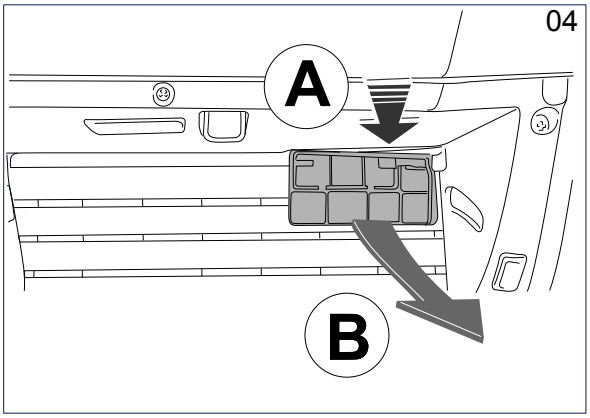

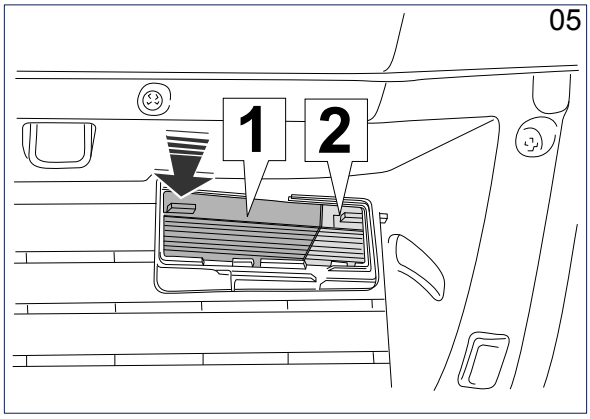

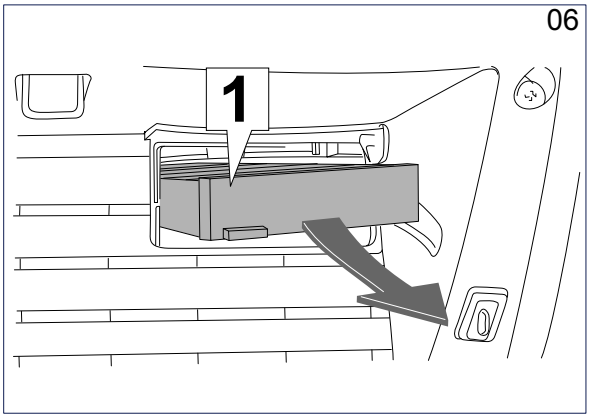

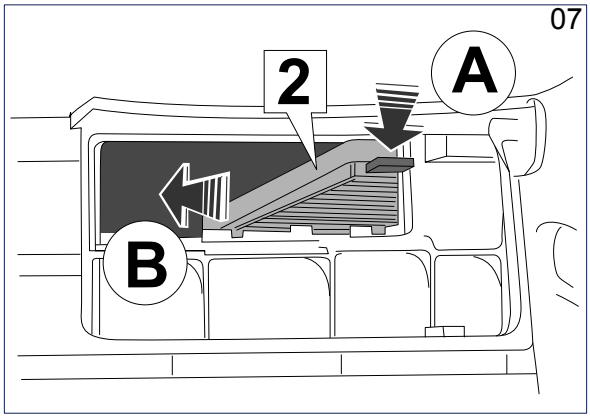

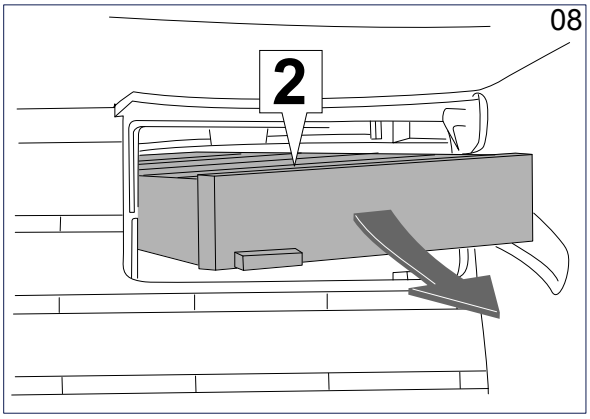

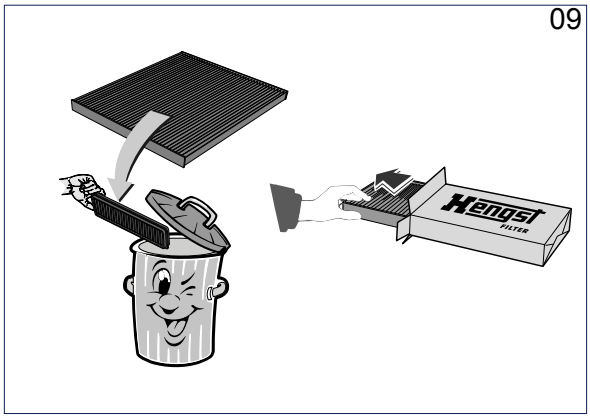

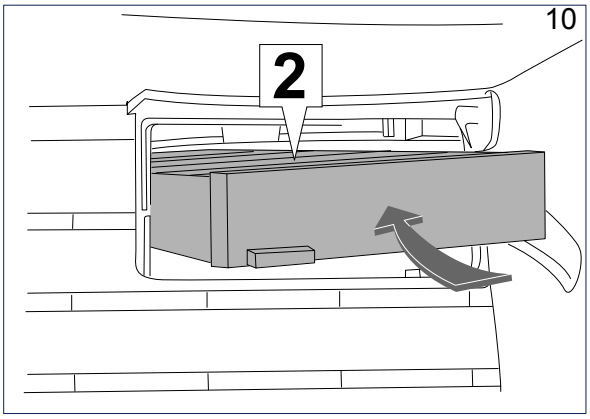

Hengst FILTER
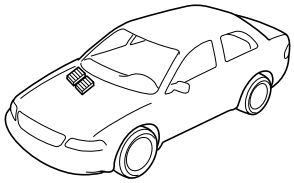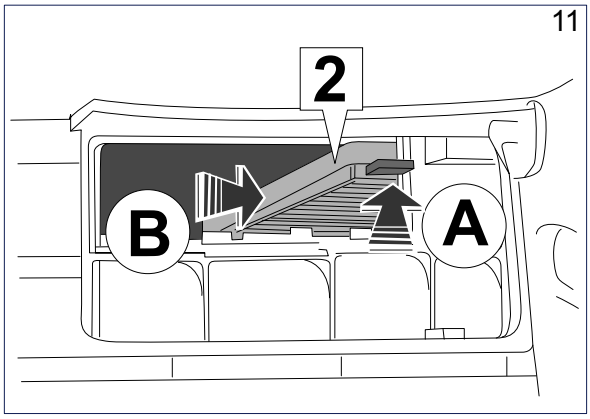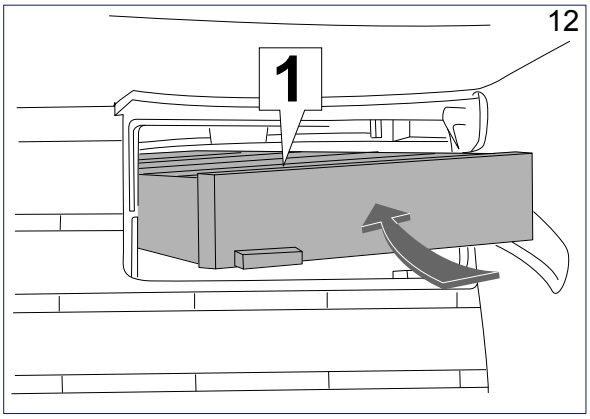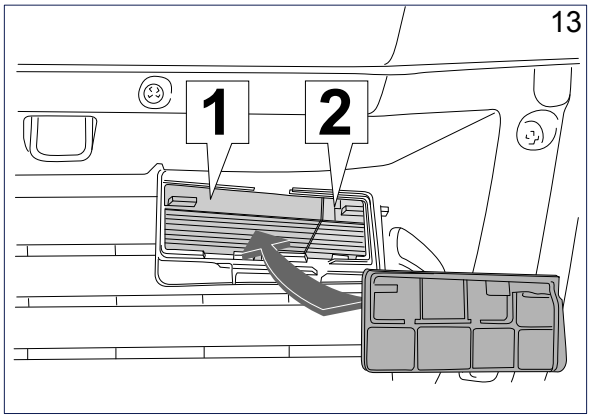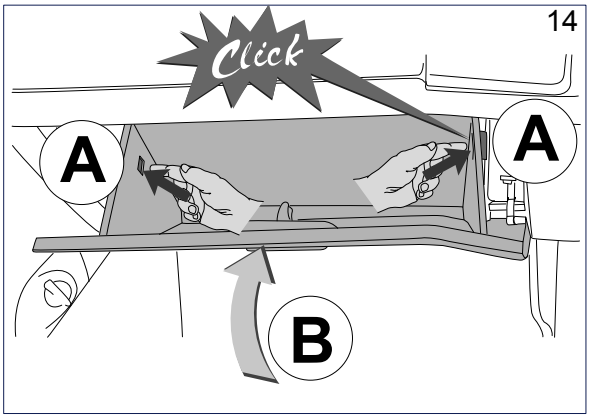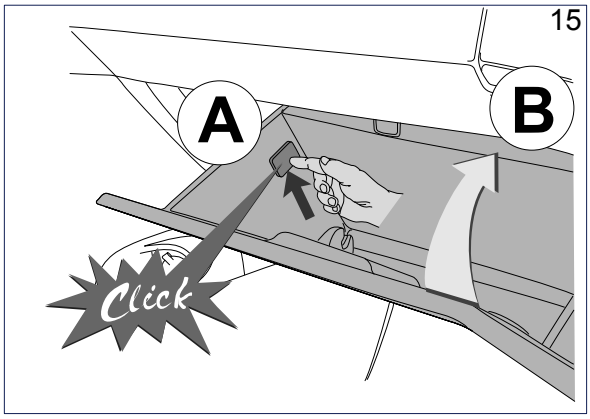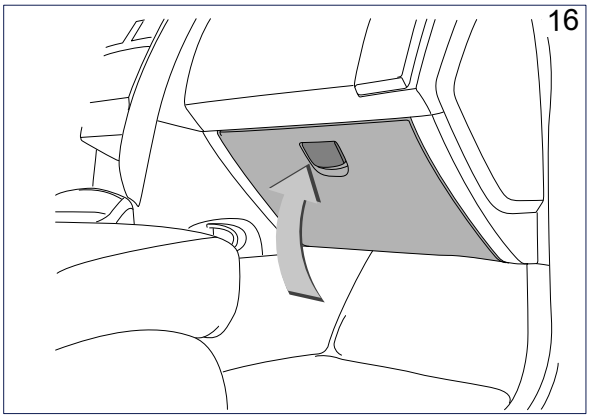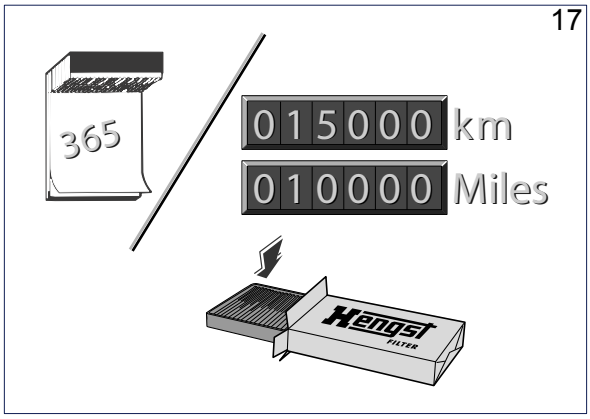
E4911LI-2