Hengst FILTER
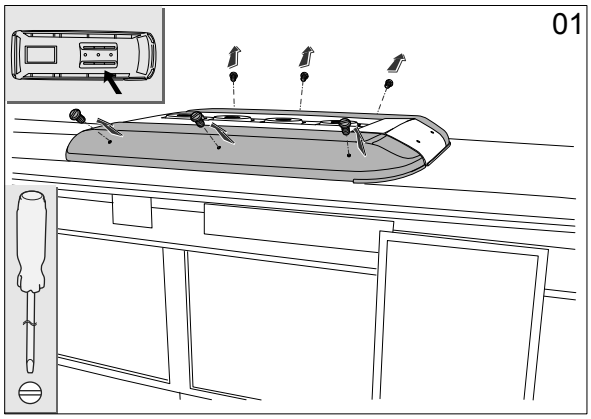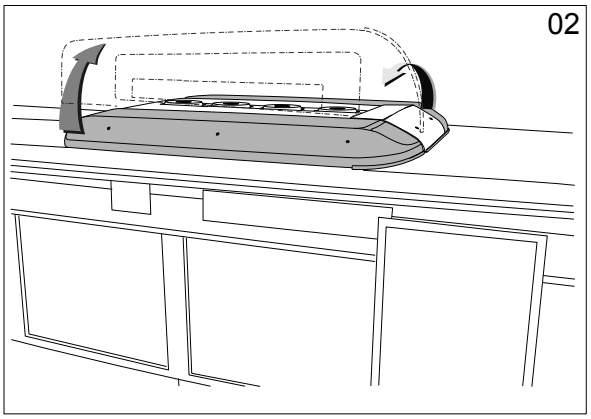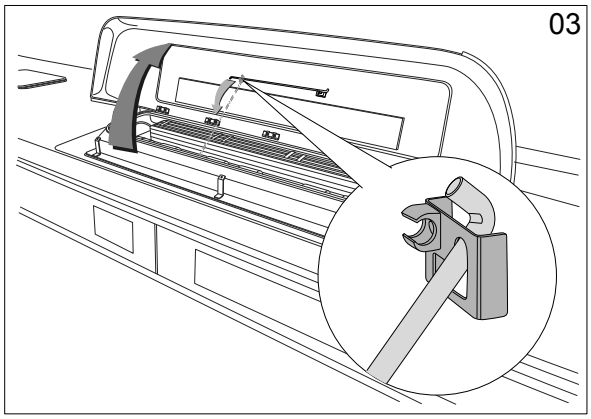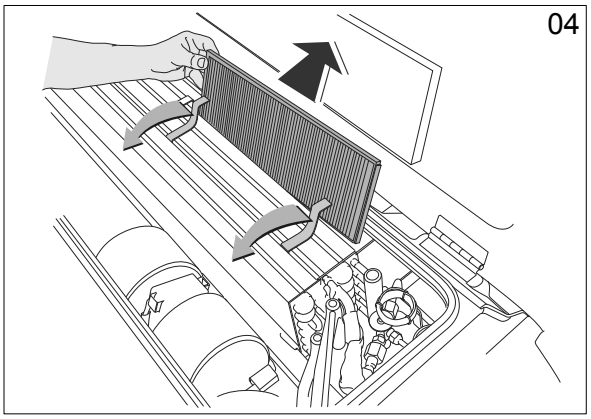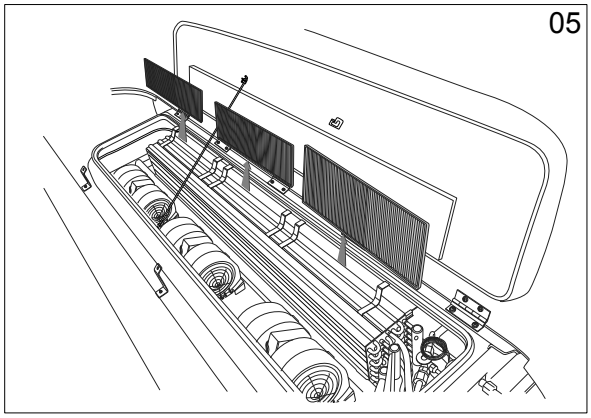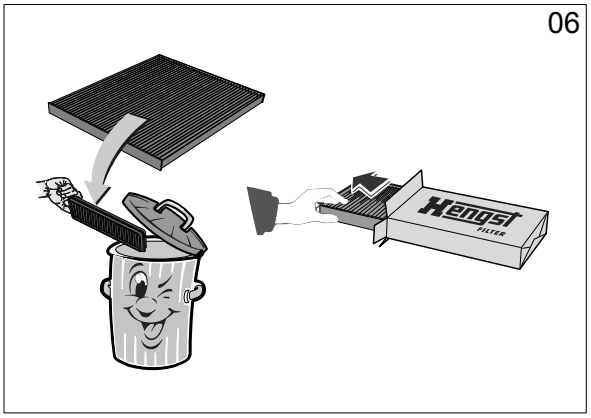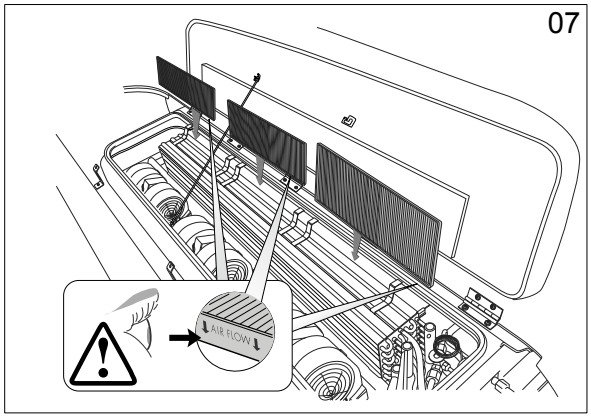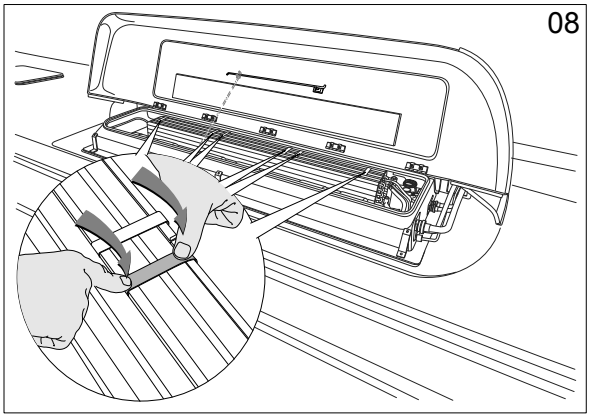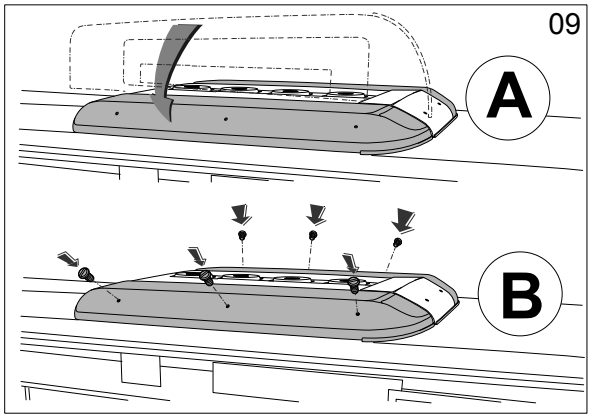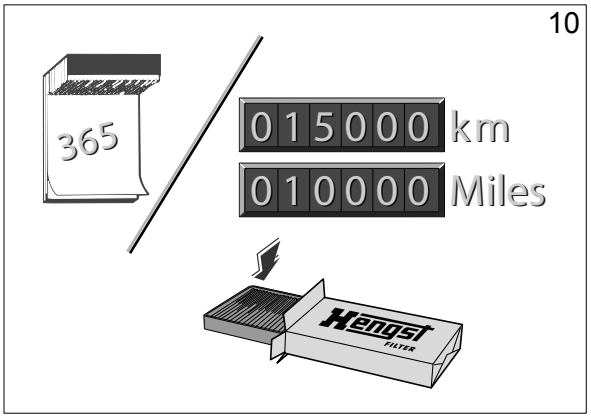
E929LI